TERMINATION FLANGED

DC - 1.8 GHz 500 WATTS

api technologies corp. > INMET

MODELS: PPT1250–500–XXXXY

SPECIFICATIONS:

Electrical:

Frequency Range _____ DC - 1.8 GHz
Impedance _____ 50 ±5% Ohms Standard
Power Handling* _____ 500 Watts Average
Derated Linearly to 0 Watts @ +150°C
VSWR _____ 1.75:1 Max.
Operating Temp. Range _____ -55°C to +150°C

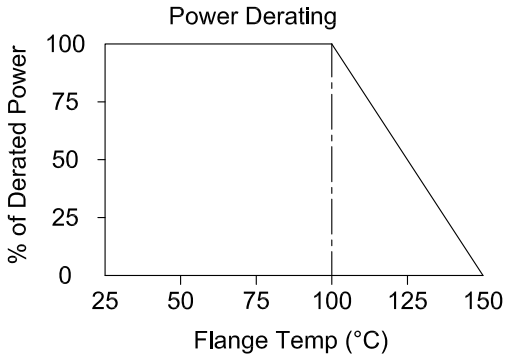

Mechanical:

Substrate _____ Beryllium Oxide
Resistor Material _____ Proprietary Thin Film
Cover _____ Alumina Ceramic
Flange _____ Nickel Plated Copper
Tab _____ Gold Plated Beryllium Copper

*Mounting Surface Shall not Exceed 100°C Max.

Model Number: PPT1250-500-50R0J Shown

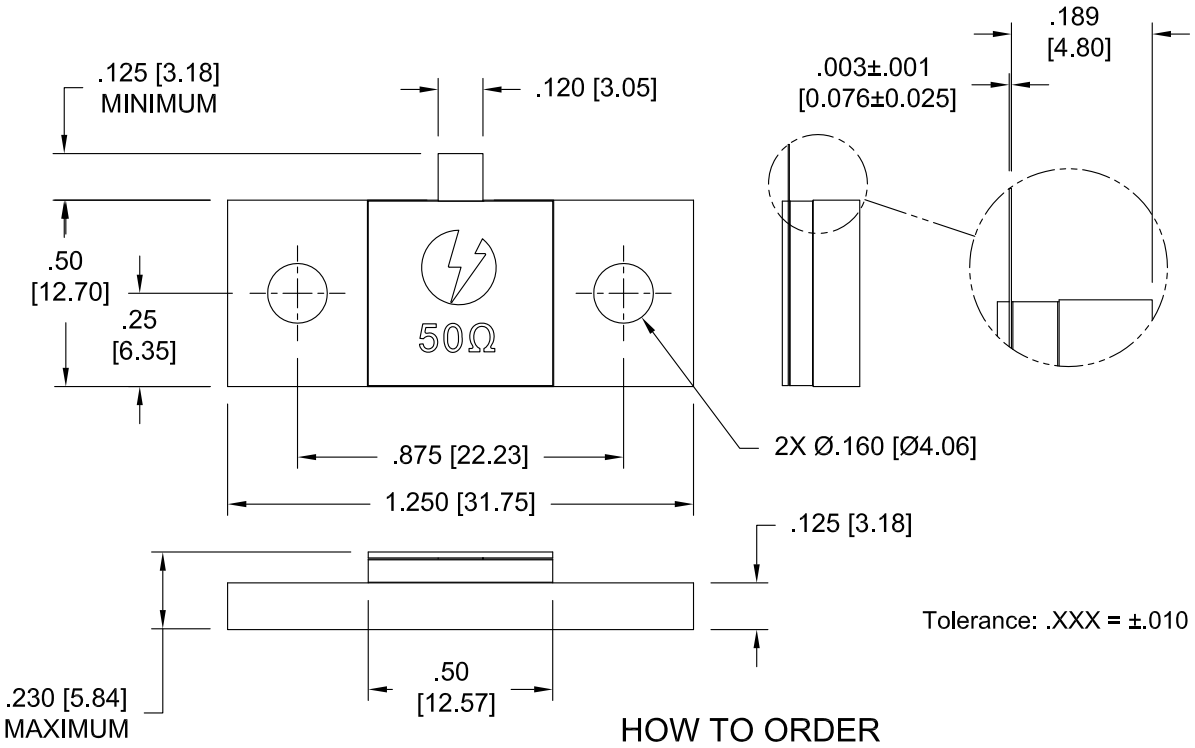

Tolerance: .XXX = ±.010

HOW TO ORDER

Model Number: PPT1250-500-XXXXY

Ohm Value
50R0 = 50 Ohms
1000 = 100 Ohms
(Other Values Available)

Tolerance
G = ±2%
J = ±5%

Note: Dimensions in Brackets are Expressed in Millimeters and are for Reference Only.
Design specifications are subject to change without notice.

300 Dino Drive • Ann Arbor, MI 48103–9457 U.S.A. • 888–244–6638 or 734–426–5553 • FAX 734–426–5557 • inmet.apitech.com